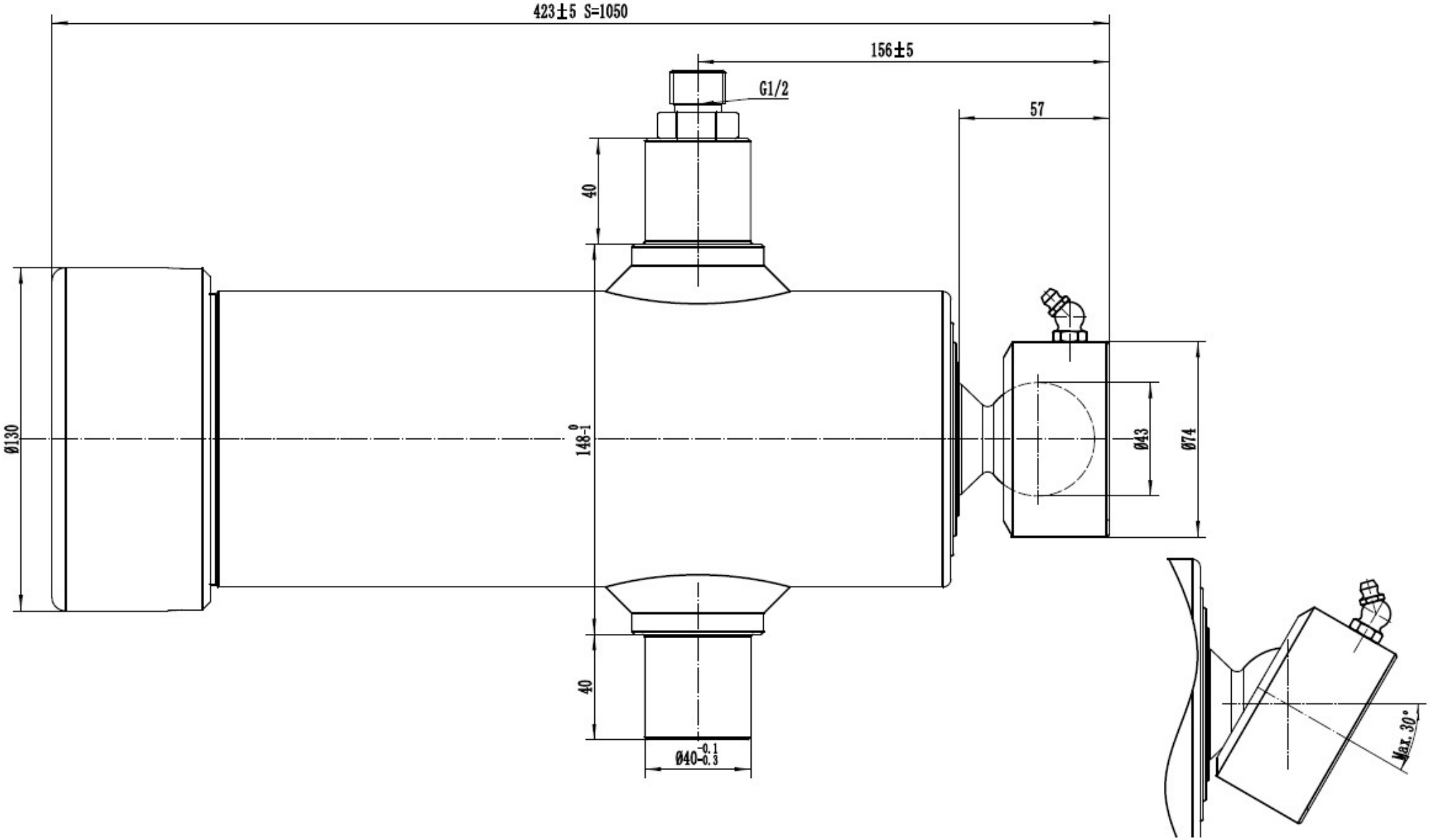

Technical Requirements:

- Max. working pressure: 160 bar;
- Test pressure: 200 bar;
- Rod diameter: 90/75/60/45;
- Stroke: 1050.