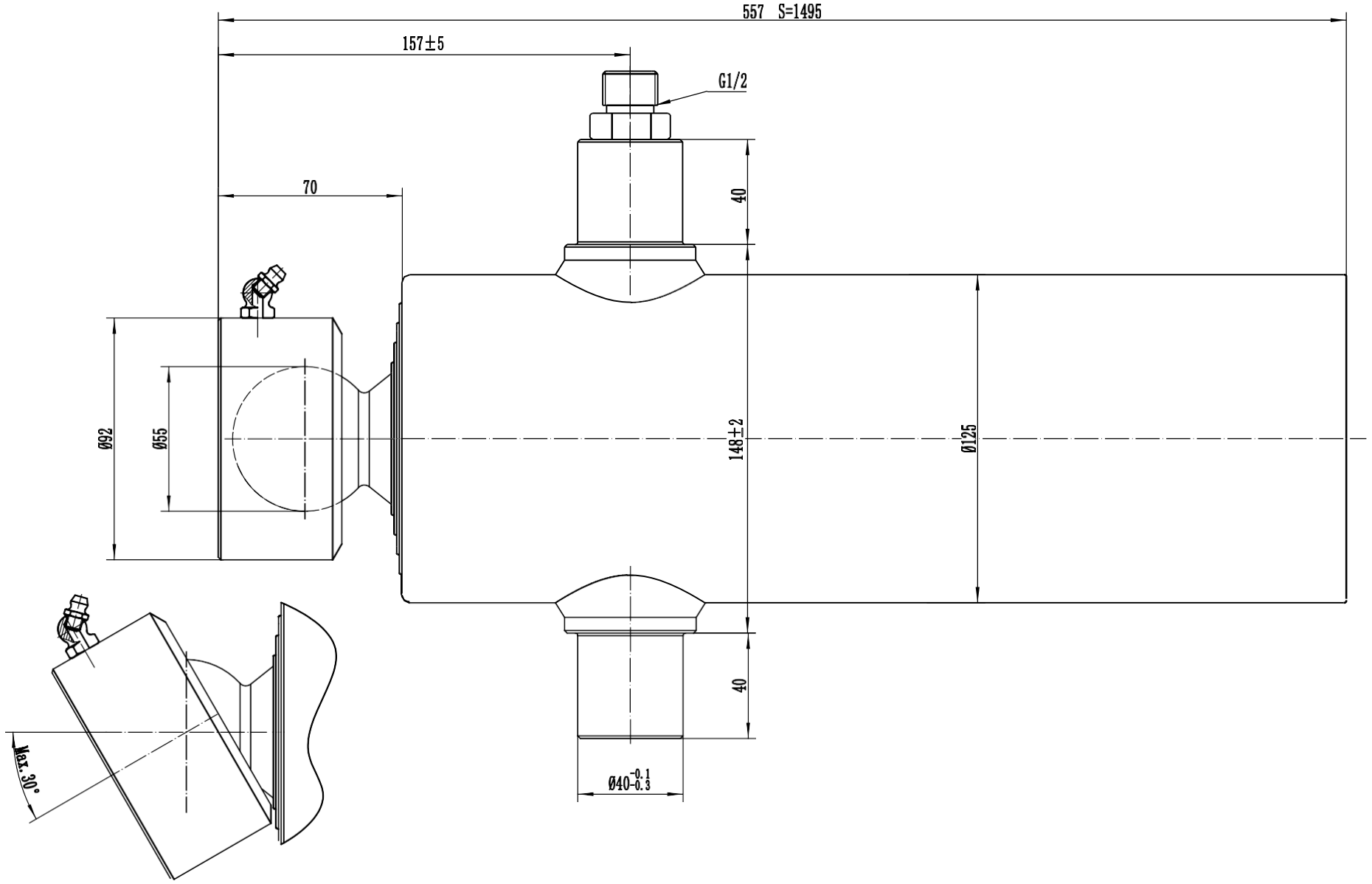

Model:	10541495		Code:	**		Max pressure bar		200	weight	39
Extension	1	2	3	4	5	6	7	8	9	Total
Diameter [mm]	105	90	75	60						
Stroke [mm]	370	373	376	379						1498
Thrust [kN]	173.1	127.2	88.3	56.5						
Oil [dm³/L]	3.2	2.4	1.7	1.1						8.3

PRESKO

10541495

Assembly

Total No.

REV: 0

FIG105-4-1495