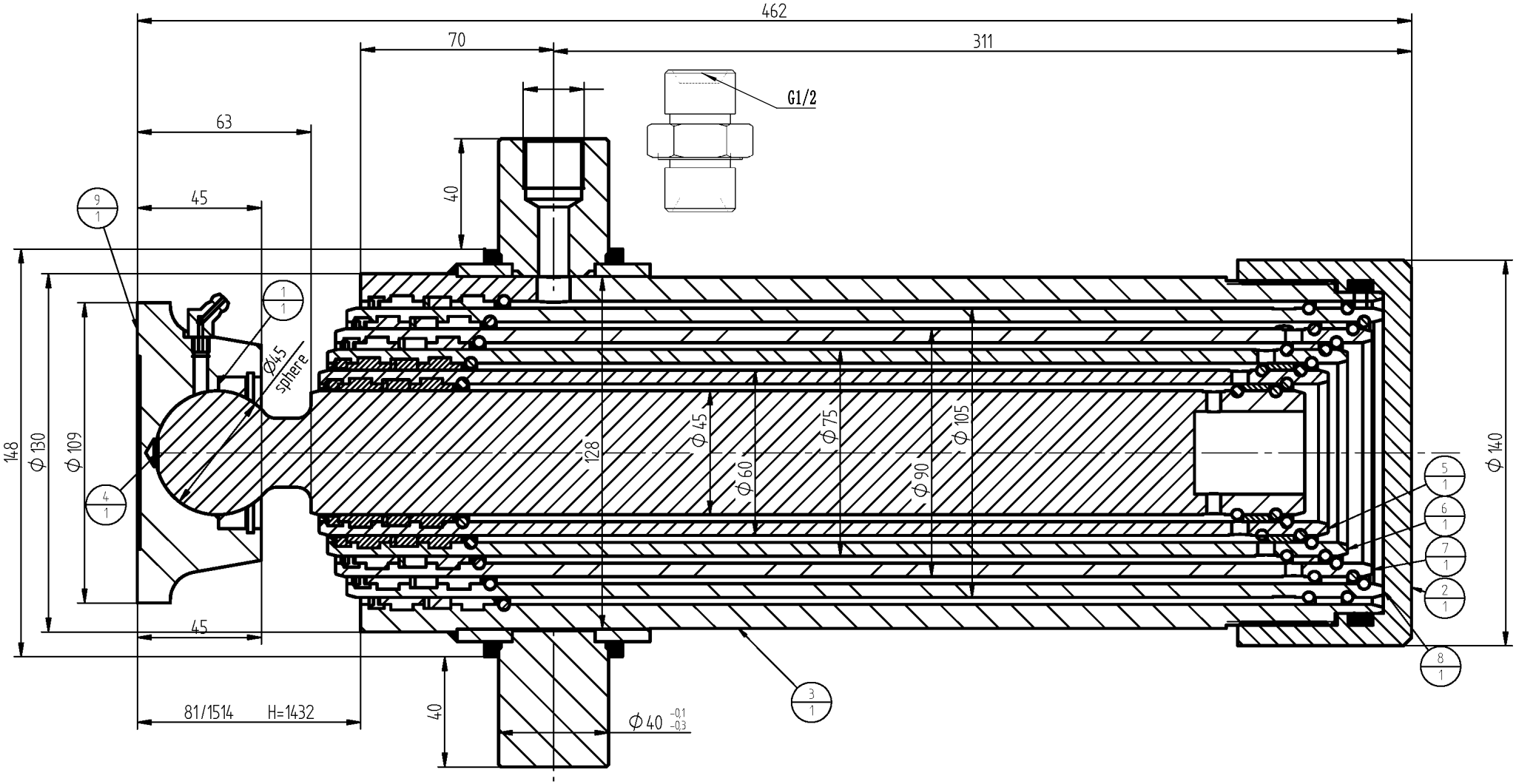

Model:	ST5NC.1432		Code:	**		Max pressure bar		160	weight	34.74
Extension	1	2	3	4	5		7	8	9	Total
Diameter [mm]	105	90	75	60	45					
Stroke [mm]	288	296	290	284	278					1436
Thrust [kN]	138.5	101.7	70.7	45.2	25.4					
Oil [dm³/L]	1.2	0.6	0.3	0.1	0.0					2.3

PRESKO

Assembly	PRESKO	
ST5NC.1432	Total No.	REV: 0
	UCB105-5-1432	