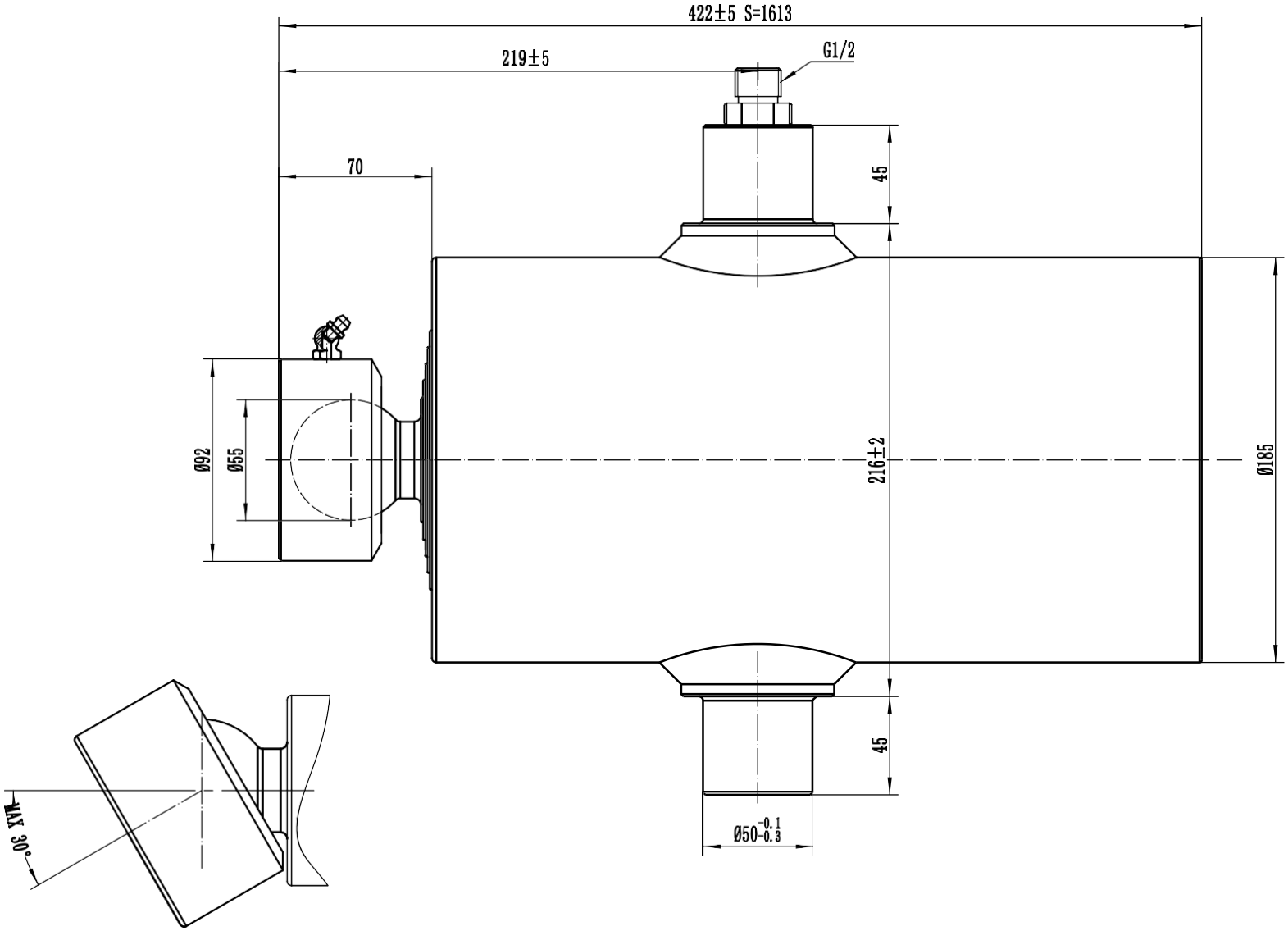

Model:	15771613		Code:	**		Max pressure bar		180	weight	79
Extension	1	2	3	4	5	6	7	8	9	Total
Diameter [mm]	155	137	120	105	90	75	60			
Stroke [mm]	216	218	233	232	235	238	241			1613
Thrust [kN]	339.5	265.2	203.5	155.8	114.5	79.5	50.9			
Oil [dm³/L]	4.1	3.2	2.6	2.0	1.5	1.1	0.7			15.2

PRESKO

15771613

Assembly

Total No.

REV: A

BL157-7-1613